Reg. No. [ ] [ ] [ ] [ ] [ ] [ ] [ ] [ ] [ ] [ ] [14CE42]

FOURTH SEMESTER B.Tech. EXAMINATION, JUNE – 2016

STRUCTURAL ANALYSIS

Time: 3 Hours **Maximum Marks: 70**

Instructions:

1) Answer any **FIVE** full Questions choosing at least any two full questions from each part.
2) Assume any missing data suitably if necessary
3) Draw neat diagrams wherever required

PART - A

1. A simply supported beam AB of span l is loaded by two points loads of w=85KN at a distance l/3 and 2/3 L from left support A. Compute the deflections and slopes at mid-span and at the points of loading using moment area method. Also compute slopes at supports A and B, Take L=12m. Adopt 2EI flexural rigidity for the middle one third span and EI for the first and last one third spans. **14**

2. A built up I section has an overall depth of 400mm, width of flanges 300mm, thickness of flanges 50mm and web thickness 30mm. It is used as a beam with simply supported ends and it deflects by 10mm when subjected to a load of 40KN/m length. Find the safe load if this I-section is used as a column with both ends hinged. Use Euler's formula. Assume a factor of safety 1.75 and take $E=2\times10^5$MPa **14**

3. A three span simply supported beam ABC is loaded by UDL over its entire length. Span AB=8m, span BC=10m and span CD=6m. UDL INTENSITY is 6kN/m, 4kN/m and 8kN/m FOR SPAN AB, BC and CD respectively. Adopt constant flexural rigidity EI for entire beam. Analyse the beam using three moment equation. Draw SFD and BMD. **14**

4. Analyse the continuous beam ABCD shown in **Fig.1** by slope deflection method and draw bending moment diagram. **14**

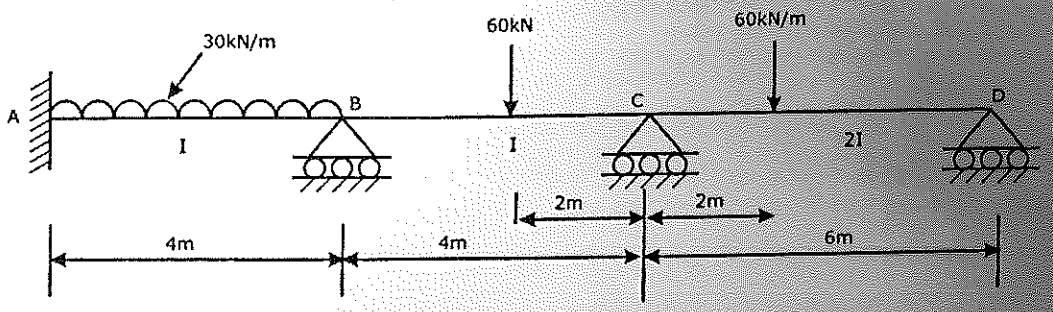

Fig. 1

PART - B

5. Analyse the frame ABCD as shown in **Fig. 2** by moment distribution method and draw BMD. **14**

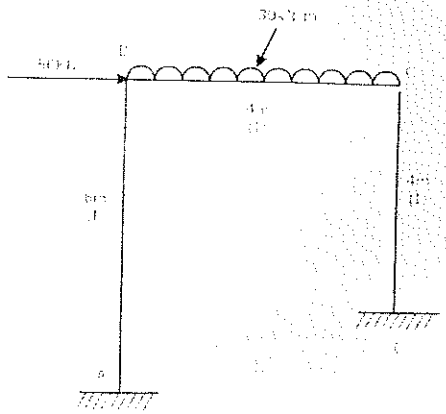

Fig. 2

6. The frame shown in **Fig.3** is supported from a rigid wall at D and E. All members have the same cross sectional area of 1060mm^2. If there is a rise of temperature of member BC by 32°C, determine the resulting forces in the members. Co-efficient of expansion, α=0.000012 per degree centigrade E=2.08×10^{5}N/mm^2. **14**

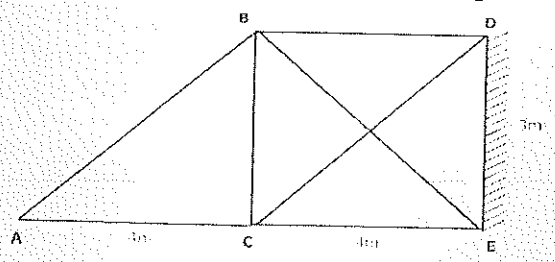

Fig. 3

7. The wheel loads shown in **Fig. 4**, roll over along a beam of 10m span. Find the maximum bending moment which can occur at a section 4m from left support. Also determine the absolute maximum bending moment anywhere on the beam. Any load can lead the system of loads. **14**

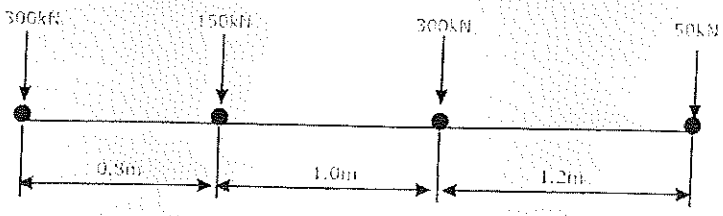

Fig. 4

8. A three hinged circular arch of span 10m and central rise 2.5m supports a point total of 100kN at left quarter span and a UDL of 20kN/m over the right half of the span. Determine the reactions, normal thrust and radial shear at right quarter span point. Draw BMD. **14**